EN

Installation

VK/02268/WA

ATTENTION: For this operation you have to cut off the power!

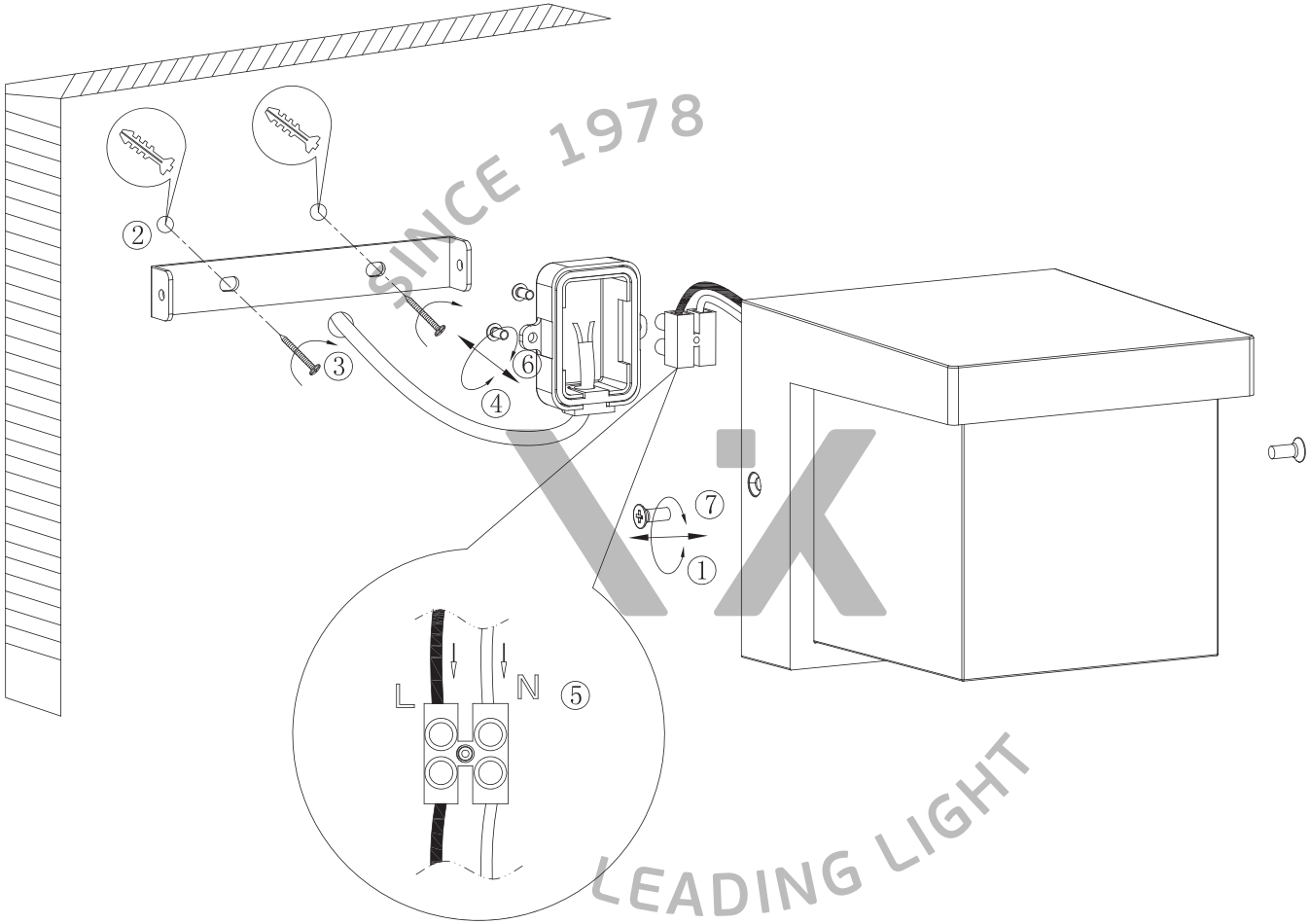

VK Leading Light / Vaios I. Karakostas S.A. Imports - Exports Trade

A: 8 Aristotelous St, Tavros, 177 78 Athens, Greece **T:** +30 210 99 69 610-11, +30 210 34 58 072, +30 210 34 58 075
F: +30 210 99 58 374 **E:** info@vkleadinglight.gr **W:** vkleadinglight.gr